Instructions for use

HOME DELUXE
WIR MACHEN ZUHAUSE

SUENO massage chair

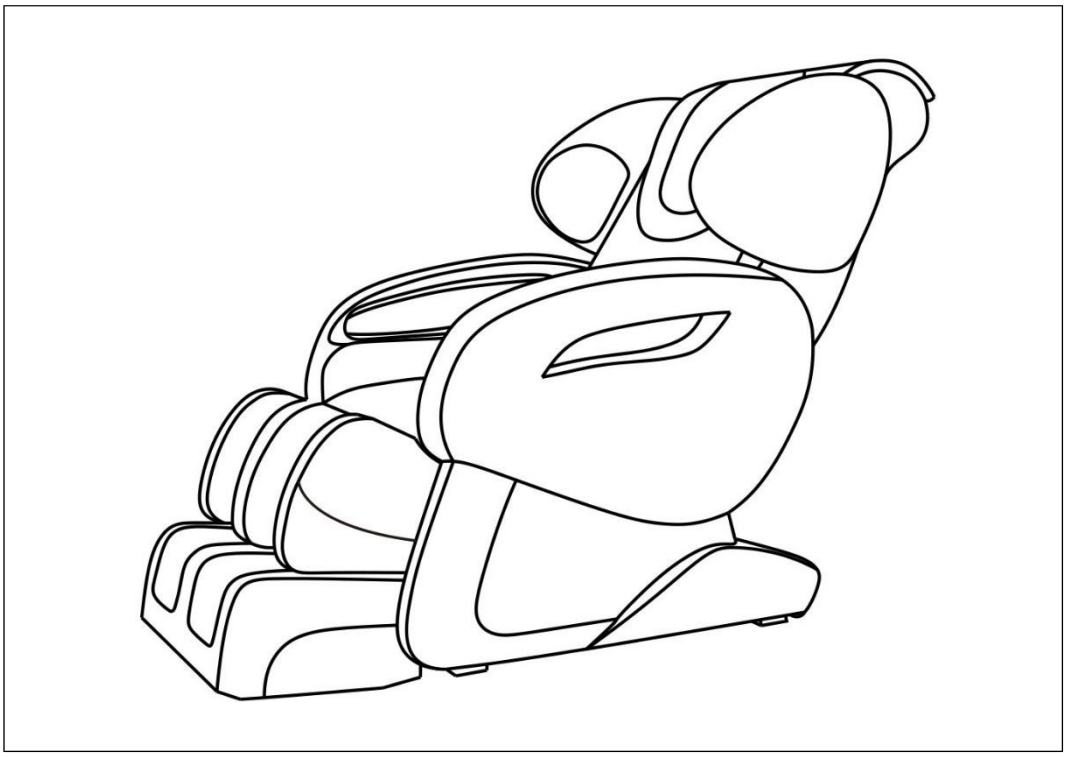

ATTENTION:

Read the instructions completely and carefully before installation and commissioning. It contains important information on assembly and use.

IMPORTANT:
KEEP FOR FUTURE REFERENCE. READ CAREFULLY!

Table of contents

1. General 3
1.1. Product overview 3
1.2. General information 3
1.3. Warranty 3
2. Information on the instructions for use 4
2.1. Availability of the instructions for use 4
2.2. Target groups of the instructions for use 4
2.3. Explanation of symbols 4
2.4. General information on the instructions for use 5
2.5. Intended use 5
2.6. General safety instructions 5
3. Product features 7
4. Scope of delivery 8
5. Assembly 8
5.1. Safety instructions 8
5.2. Structure of the product 9
6. Application 10
6.1. Safety instructions 10
6.2. Initial commissioning 11
6.3. Operation 11
6.4. Operating elements 12
7. Troubleshooting 14
8. Maintenance and care 15
8.1. Safety instructions 15
9. Disassembly 15
9.1. Safety instructions 15

10. Disposal note 16
10.1. Electrical and electronic equipment - Information for private households 17

Dear customer,

Thank you for choosing a product from **Home Deluxe GmbH.** We hope you enjoy your new SUENO massage chair.

The instructions for use support you during installation, commissioning, operation and maintenance of the product. The instructions for use and the safety instructions must be read carefully and completely. Observe these instructions to avoid dangers.

1. General

1.1. Product overview

Model: SUENO massage chair | Item ID: 13586, 13587

1.2. General information

In order to live up to our claim, we are constantly improving the quality, simplifying the assembly, operation or adapting the products to the customer's wishes. Due to these changes, the current version of the instructions for use can be found on our homepage.

The term "product" is used in the instructions for use for the "SUENO massage chairs".

1.3. Warranty

The statutory liability for defects and warranty rights apply from the date of purchase.
Home Deluxe GmbH accepts no liability for damage caused by failure to observe the instructions for use. Complaints resulting from improper assembly or use are excluded from the warranty. In the event of defects in this product, please contact the manufacturer in writing:

Home Deluxe GmbH
Schanzeweg 2
32312 Lübbecke
Germany
Tel.: +49 (0)5743 6181-0
E-mail: info@homedeluxe.de
www.home-deluxe-gmbh.de

If you have any further questions, please do not hesitate to contact our service team.

2. Information on the instructions for use

2.1. Availability of the instructions for use

The instructions for use are part of the product and should be kept complete and in the immediate vicinity of the product.

2.2. Target groups of the instructions for use

The instructions for use must be read and observed by every person involved with any of the following activities or use:

- Unpack
- Assembly / Installation
- Commissioning / Operation
- Maintenance / Testing / Care
- Troubleshooting / Repair
- Disposal

2.3. Explanation of symbols

Symbol	Explanation of symbols
	**WARNING** The symbol indicates possible hazards that can cause fatal and serious injuries. Before carrying out the corresponding assembly or application step, the corresponding note must be read.
	**INFO** The symbol gives important information and indicates damage to property. Observe these before carrying out the corresponding assembly or application step in order to understand problems and avoid damage.
	**CE marking** The symbol declares the conformity of the product with the applicable requirements of the European Community. The current declaration of conformity is available from Home Deluxe GmbH on request.
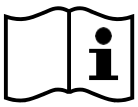	**Follow the instructions for use** The symbol indicates that the instructions for use must be consulted.
	**Disposal of batteries and accumulators** Batteries or rechargeable batteries must not be disposed of with household waste!
	**Disposal of electrical and electronic equipment** Electrical and electronic equipment must not be disposed of with household waste!
	**Alternating current** The symbol indicates that the product is operated with alternating current.
	**Protection class I** The symbol indicates that all conductive housing parts of the equipment must be connected to the protective earth conductor system of the fixed electrical installation. It is a protective earth. In the event of a fault current, the circuit is de-energised by a fuse.

2.4. General information on the instructions for use

The instructions for use refer to the SUENO massage chair. It contains important information on assembly, operation, maintenance and cleaning. The instructions for use, in particular the safety instructions, must be read carefully before the product is used. Only use the product as described in these instructions for use to prevent accidental injury or damage. If you pass the SUENO massage chair on to third parties, these instructions for use must also be handed over.

2.5. Intended use

The product is of high quality, durable and intended or suitable exclusively for private use to a reasonable and customary extent. Furthermore, our product is **not intended for** commercial use. Commercial use is only permitted with the written consent of Home Deluxe GmbH.

The product serves as furniture for indoor domestic use. It is used as seating furniture with various electrical functions. Do not place the product in direct sunlight to avoid fading of the cover.

Only use the product as described in these instructions for use. Any other use is considered improper and may result in damage to property or personal injury. The manufacturer accepts no liability for damage caused by improper or incorrect use.

2.6. General safety instructions

General hazard warnings



- Improper handling can lead to considerable personal injury and damage to property. For this reason, assembly, installation, commissioning, troubleshooting, maintenance and repair work may only be carried out by qualified persons.
- The product can be used by children aged from 8 years and above and persons with reduced physical, sensory or mental capabilities or lack of experience and knowledge if they have been given supervision or instruction concerning use of the appliance in a safe way and understand the hazards involved.
- **Only** set up the product if the scope of delivery is complete and in perfect condition.
- Make sure that all parts are undamaged and properly assembled. Improper assembly may result in injury. Damaged parts can affect safety and function.
- Keep the power cord away from hot surfaces.
- Do not use the product in combination with other therapeutic devices or electric blankets.
- Do not use the product in an excessively humid or dusty environment.
- Do not make any changes to the product
- Check the cable connections and closures at regular intervals.
- The product is suitable for max. 1 person.
- The product may be loaded with max. 150 kg.
- **Fire hazard! Do** not use the product together with a blanket or a pillow.
- The product should never be left unattended. Disconnect the plug from the power supply.
- Keep long hair away from the massage during use.

- It is recommended **not to** use the massage for more than 15 minutes.
- People with medical conditions should consult their doctor before using the massage chair.
- The product is not intended for self-treatment. It does not replace a health care provider.
- If your legs and feet slip off the leg rest during the massage, switch off the massage function.
- **Danger of burns!** High temperatures may occur regardless of the setting of the handset**. Do not use** the product on babies, invalids, sleeping or unconscious persons. Do not use on sensitive skin or on persons with poor circulation.
- Connect the product to a proper earthed power supply.
- Keep pets or children away from the product.

Danger for children



- Keep children away from packaging materials. Make sure that small children do not put small parts in their mouths. There is a risk of choking, among other things!
- Keep children away from the assembly area while setting up the product. The scope of delivery contains small parts that can be swallowed or cause serious injuries.
- Keep children away from the product.
- **Danger of tipping over!** The product is not a child's toy. The product can fall over when loaded on one side, which can result in death.
- Children can injure themselves when playing with the product or pulling it up.
- Do not place the product directly or in the immediate vicinity of a play area.
- Explain to the children how to use the product properly and never leave them unsupervised while playing.

Risk of injury

Improper handling of the product can lead to injuries



- Check the product for visible damage before each use.
- Do not make any constructive changes to the product. Any modification must be authorised in writing by the manufacturer and carried out in accordance with the instructions.
- Do not use the product if liquids have been spilled on it.
- Do not use the product if the fabric of the backrest is damaged and the inner component is exposed.
- Do not use the product under the influence of alcohol or drugs.
- If the product is damaged, it must no longer be used. Damaged parts must be repaired or replaced with original spare parts.
- If the mains cable is damaged, take the product out of operation while the mains cable is being replaced by the manufacturer, its customer service or a qualified electrician.
- Do not use the product if the padding or seat has been removed.
- If any pain or discomfort occurs during the massage, stop the massage immediately and contact a doctor.
- **Danger to life due to electrical voltage**: There is an immediate danger to life if live parts are touched. Damage to the insulation or individual components can be life-threatening. -> If the insulation is damaged, switch off the power supply immediately and have it repaired.

Risk of damage



- Improper handling of the product can lead to damage.
- Repair and maintenance work on the electrical system may only be carried out by a qualified electrician.
- Do not open the packaging with sharp objects (e.g. knife, scissors or similar), as this may damage the product. Be careful when opening.
- If you open the packaging carelessly with a knife or other sharp objects, the product may be damaged. Be very careful when opening the packaging.
- Do not climb on the product, there is a risk of tipping.
- Do not use the product near heat sources or open fire.
- Use of the chair is prohibited from a temperature of 40°C or higher.
- Avoid permanent direct sunlight.
- Never drop objects into openings.

Explosion hazard



Caution: Do not store highly flammable, combustible or explosive substances inside the product. Highly flammable substances can catch fire.

3. Product features

Product name	SUENO
Voltage	100 - 240 V AC
Frequency	50 - 60 Hz
Power	100 W
Noise level	max. 53 dB
Recommended period of use	30 min.
Seat position (L x W x H)	1430 x 760 x 1120 mm
Lying position (L x W x H)	1800 x 760 x 810 mm
Seat width	approx. 570 mm
Seat length	approx. 480 mm
Weight	75 kg
Adjustable footrest	for body height from 150 - 190 cm

4. Scope of delivery

Check the packaging for external damage upon delivery. Furthermore, immediately after unpacking, check that the scope of delivery is complete and that the product and all components are in perfect condition. Only assemble the product if the scope of delivery is complete and undamaged.

Components/Parts

No.	Description	Number	Images
1	Massage chair	1	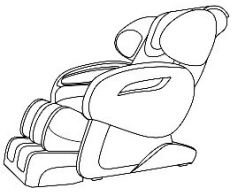
2	Manual switch	1	
3	Power cable	1	
4	Tool	1	

5. Assembly

5.1. Safety instructions

All health and safety information must be read.

Risk of injury
Improper handling during assembly can lead to injuries



- Make sure that the package is opened at the top. Be very careful when opening with a sharp object.
- We recommend at least 2 people to unpack the product.
- **Only** set up the product if the scope of delivery is complete and in perfect condition.
- Make sure that all parts are undamaged and properly assembled. Improper assembly may result in injury. Damaged parts can affect safety and function.
- Operating errors, assembly errors or damage caused by assembly are excluded from the warranty.
- Place and use the product only on a flat and non-slip surface.
- Do not place the product where aerosol products are used or where oxygen is administered.
- Keep children away from the assembly site while assembling the product. The scope of delivery contains small parts that can be swallowed or cause serious injuries.

- If the mains cable is damaged, take the product out of operation while the mains cable is being replaced by the manufacturer, its customer service or a qualified electrician.
- **Danger to life due to electrical voltage**: There is an immediate danger to life if live parts are touched. Damage to the insulation or individual components can be life-threatening. -> If the insulation is damaged, switch off the power supply and have it repaired.

5.2. Structure of the product

The product is delivered disassembled and can be assembled with little effort. Follow the assembly instructions carefully. If they are not followed, the function and safety of the product cannot be guaranteed.

The mains plug must be inserted into a grounded socket that is properly installed according to all local regulations. **Make sure there is sufficient distance to the front and rear.** (**see chapter "Operation"**)

- The following instructions must be read carefully.
- If the width of the aisle is less than 90 cm, the product will not fit through.

Figure	Set-up step
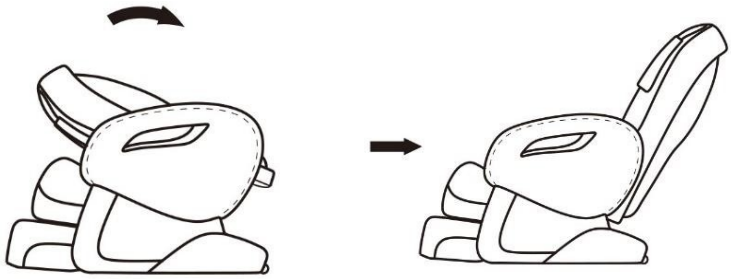	Turn the backrest backwards until it locks into place.
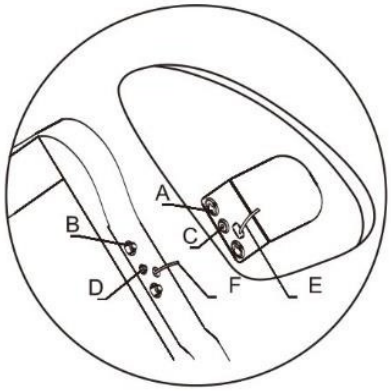	Open the zip on the school element and place it against the backrests so that the openings are in the backrest. "A" and "B" exactly on top of each other lie. Connect the air hose "E" to the air hose "F" on the backrest. Close the zip. Repeat the above steps for the second shoulder support.
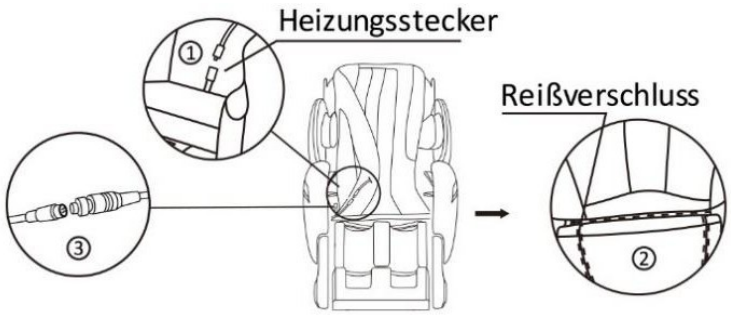	Connect the backrest cable to the massage chair. The corresponding plug is located under the seat. Connect the backrest and the seat with the zip. Connect the control cable to the cable on the chair.

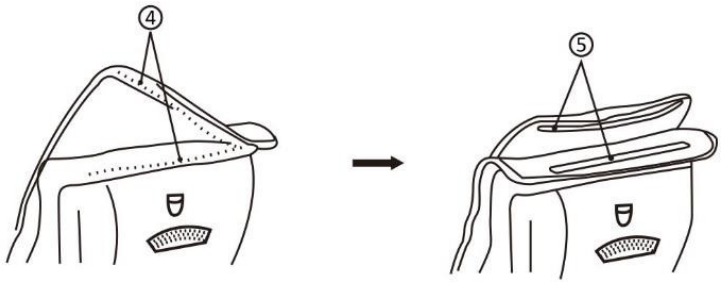	Attach the back cushion with the zip at the top of the backrest. Fasten the cushion with the Velcro fastener.
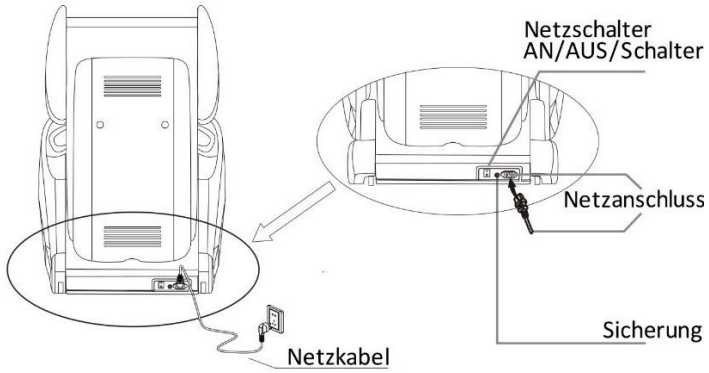	Plug the mains cable into the electrical connection of the product.

Switch off the product on the back with the main switch. In addition, all buttons must be switched off before the mains plug is plugged into the power supply.

6. Application

6.1. Safety instructions

The following health and safety information must be read carefully.

Risk of injury
Improper handling during operation can lead to injuries

- Do not use a damaged product.
- Do not make any changes to the product.
- The product is not a children's toy, climbing wall or sports equipment. Children are not allowed to play with the product.
- Check all cable connections at regular intervals.
- Use the product only when sitting.
- Keep the product dry and away from liquids.
- Do not use immediately after eating.
- During commissioning, the product **must** be under constant supervision.
- Keep the product clean.
- If the mains cable is damaged, take the product out of operation while the mains cable is being replaced by the manufacturer, its customer service or a qualified electrician.
- Do not dismantle the backrest cover. Touching the internal components may cause electric shock or malfunction.
- Do not move the product when someone is sitting in it.
- Do not use the product if the socket is loose.
- Do not use the product if there is a malfunction.
- Do not use the product if your body or hands are damp or wet.

- Do not wear loose clothing, scarves, ties or jewellery during the massage function.
- **Risk of falling:** Do not stand up during the massage, the airbag function holds you in place.
- If you experience any pain or discomfort during the massage, stop the massage immediately and contact your doctor.
- Keep long hair away while using the product.
- **Danger to life due to electrical voltage**: There is an immediate danger to life if live parts are touched. Damage to the insulation or individual components can be life-threatening. -> If the insulation is damaged, switch off the power supply and have it repaired.
- Switch off all functions and the handset before disconnecting the product from the power supply.
- Always disconnect the product from the power supply after use.
- Do not place the power cord under the massage chair or other heavy objects.
- Do not wrap the power cord around the massage chair.

6.2. Initial commissioning

Check the product for damage before using it for the first time. The product may only be used if it is undamaged.

6.3. Operation

Check before using the product,

- the proper condition.
- the electrical connection.
- all function on the hand-held transmitter.
- that the armchair is not in direct sunlight.
- that there is sufficient space to the front and to the rear. (see fig. 1)

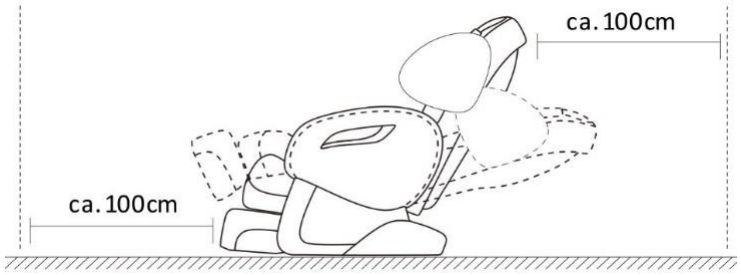

Fig. 1

Switch on the main switch at the back of the product to supply it with power. (see fig. 2)

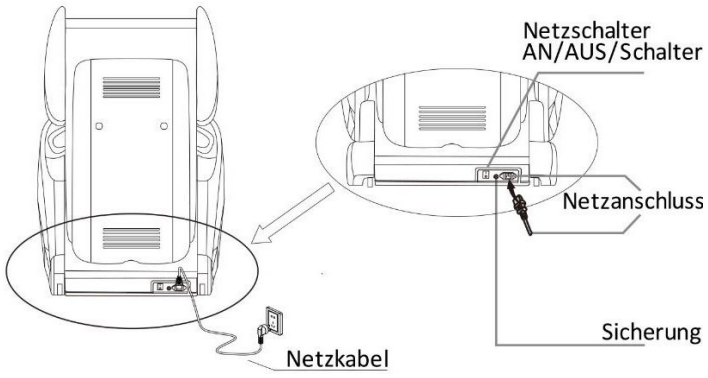

Fig. 2

6.4. Operating elements

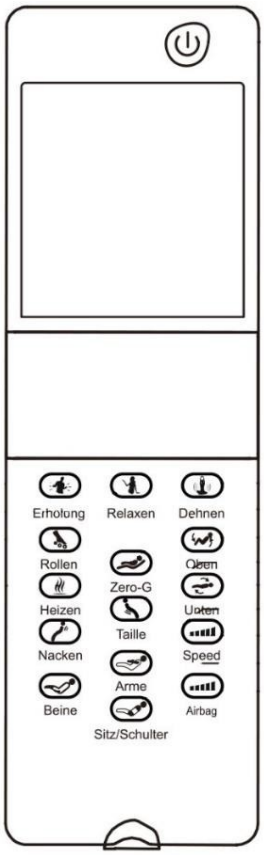

Key	Function
	Power
	Recreation
	Relax
	Stretch
	Rollers
	Top
	Below
	Heating
	Zero-G
	Waist
	Neck
	Speed
	Poor
	Legs
	Airbag
	Seat / Shoulder

The display automatically switches to the Home screen if no selection has been made.

General notes

- The product starts with the auto mode "recovery" after switching on.
- The programme always starts at 15 min. and counts down to "0".
- The functions are switched on by pressing once and switched off by pressing again.
- The speed setting is available in each mode.
- The airbag setting is available in each mode.
- When you stop the massage, press the "Off" button and wait until the product turns off.
- Turn off the main switch **only** after 30 seconds.

On / Off

Press the button to activate the LCD backlight. Then press the desired massage function to start the massage. To stop, press the button again.

Auto mode

You can choose between 3 different modes.

- Recreation
- Relax
- Stretch

Recreation

Press the "Relaxation" button for a gentle full-body massage with air bags and the roller system for relaxation.

Relax

Press the "Relax" button for a comprehensive full-body massage with airbags and rolling system for deep relaxation.

Stretch

Press the "Stretch" button which stretches the body and loosens the muscles.

Rollers

Press the "**Rolls**" button for the area where you want to set the rolls. Here you can switch

the rollers on or off.

Top / Bottom

Press and hold the "up" button  or "downbutton  to move the product to the desired position.

Heating

Press the "Heating" button  to switch the heating on or off.

Zero-G

Press the "Zero-G" button  to move the product to the horizontal position.

Waist

Press the "Waist" button  to switch the waist area on or off.

Press the "Roll" button  , the "Speed" button  or the "Airbags" button  to switch on or off and adjust the intensity.

Neck

Press the "Neck" button  to switch the waist area on or off.

Press the "Roll" button  , the "Speed" button  or the "Airbags" button  to switch on or off and adjust the intensity.

Arms / Legs

Press the "Arms" button  or the "Legs" button  to switch the arms or legs area on or off.

Press the "Roll" button  , the "Speed" button  or the "Airbags" button  to switch on or off and adjust the intensity.

Speed

Press the "Speed" button  to select 4 different speeds.

Airbag

Press the "Airbag" button  , to select 4 different strengths.

Seat / Shoulder

Press the "Seat / Shoulder" button  , to switch the shoulder and seat area on or off.

7. Troubleshooting

If the following faults occur during operation, check the following fault causes using the following table. If the fault cannot be remedied by the measures listed, take the product out of operation.

Error	Possible cause	Solution
The product wobbles or vibrates	- The product stands on uneven ground - The product is too heavily loaded	- Place the product on a flat surface - Respect load limits
Mains cable or mains plug are unusually hot	- 1	- Take product out of service, contact customer service
The colour fades	- The product is directly in the sunlight	- Place the product out of direct sunlight.
Massage rollers no longer function	- Massage rollers defective - Mains cable not plugged in correctly	- Take product out of service, contact customer service - Relieve the massage rollers - Check the mains cable and plug it in correctly
Display is off	- Power cable defective - Display defective	- Take product out of service, contact customer service - Check mains cable - Replace hand switch
Armchair does not heat properly	- Heating elements defective	- Take product out of service, contact customer service - Check heating, replace if necessary
Chair cannot be switched on	- Mains cable not plugged in correctly - Power cable defective	- Take product out of service, contact customer service - Plug in the mains plug correctly - Use new mains cable
Manual switch does not work properly	- Hand switch defective	- Take product out of service, contact customer service - Switch on main switch - Switch on hand switch - Replace hand switch - Check the connection cable of the hand switch

Error	Possible cause	Solution
Noises from the armchair	- Rollers defective	- Take product out of service, contact customer service
Product cannot be pushed	- Rollers are blocked - Rollers are dusty	- Remove items - Remove dust

If another problem occurs with the product, contact us.

8. Maintenance and care

8.1. Safety instructions

Risk of injury
Improper handling during operation can lead to injuries



- Before cleaning/maintenance/care, switch off the power supply to the product.

Cleaning the massage chair

- Can be cleaned with a slightly damp cloth
- Do not wash the cushion in a washing machine and do not iron the cover.

Cleaning the hand control

- Can be cleaned with a clean, dry cloth.
- Do not use a damp cloth.

Do not use aggressive or abrasive cleaning agents such as benzene or thinner.

9. Disassembly

9.1. Safety instructions

Risk of injury
Improper handling during disassembly can lead to injuries



- Disconnect the product from the power supply before disassembly. Contact with live components may result in electric shock, burns or death.
- The product has a high weight and large dimensions, at least 1 strong person is required for disassembly.
- Secure the product from tipping over before disassembly.
- Switch off all functions and the handset before disconnecting the product from the power supply.

Disassembly of the product must be carried out in reverse order to assembly. (**see chapter Assembly**)

10. Disposal note



- Dispose of the product and all components in accordance with local and country-specific regulations, thus avoiding damage to the environment.
- Our packaging is made from environmentally friendly materials. They can be recycled and thus serve as valuable raw materials. Dispose of the packaging material (cardboard boxes, dirty packaging, etc.) separately and properly in accordance with the applicable national regulations.
- Contact the manufacturer if you are unsure about disposal.
- You can also obtain information on proper disposal from your local waste disposal centre.

10.1. Electrical and electronic equipment - Information for private households

The Electrical and Electronic Equipment Act (ElektroG) contains a large number of requirements for the handling of electrical and electronic equipment. The most important ones are summarised here.

1. Separate collection of waste equipment

Electrical and electronic equipment that has become waste is referred to as WEEE. Owners of WEEE must dispose of it separately from unsorted municipal waste. They must separate used batteries and accumulators that are not enclosed in the WEEE, as well as lamps that can be removed from the WEEE without destroying it, from the WEEE without destroying it before handing it in at a collection point. Separate WEEE to prepare it for reuse.

2. Batteries and rechargeable batteries



As a rule, owners of WEEE must separate WEEE from batteries and accumulators that are not contained in the WEEE before handing them over at a collection point. This does not apply if the WEEE is handed over to public waste management authorities and separated from other WEEE there for the purpose of preparation for reuse.

3. Options for returning old appliances

Owners of old appliances from private households can hand them in at the collection points of the public waste management authorities or at the take-back points set up by manufacturers or distributors in accordance with the Elektro G. An online list of collection and take-back points can be found on the website: or . An online list of collection and take-back points can be found on the website: https://www.stiftung-ear.de or https://www.take-e-back.de.

4. Data protection notice

Old devices often contain sensitive personal data. This applies in particular to information and telecommunication technology devices such as computers and smartphones. In your own interest, please note that each end user is responsible for deleting the data on the old devices to be disposed of.

5. Distributors' take-back obligation

Distributors with a sales area for electrical and electronic equipment of at least 400 m2 and distributors of foodstuffs with a total sales area of at least 800 m2 who offer electrical and electronic equipment several times in a calendar year or permanently and make it available on the market are obliged to do so,

- when supplying a new EEE to an end-user, to take back free of charge at the place of supply or in the immediate vicinity an old EEE of the end-user of the same type that fulfils essentially the same functions as the new EEE, and
- to take back, free of charge, at the end-user's request, WEEE that does not exceed 25 cm in any external dimension in the retail outlet or in the immediate vicinity; the take-back may not be linked to the purchase of an EEE and is limited to three WEEE per type of equipment.

6. Meaning of the "crossed-out dustbin" symbol



The symbol of a solid waste bin regularly displayed on electrical and electronic equipment indicates that the respective device is to be collected separately from unsorted municipal waste at the end of its service life.

- Manufacturer registration number
- As a manufacturer in the sense of the ElektroG, we are registered with the responsible Foundation Elektro-Altgeräte Register (Nordostpark 72, 90411 Nürnberg) under the following registration number: WEEE Reg. No. DE86467979

Home Deluxe GmbH
Schanzeweg 2
32312 Lübbecke Germany
Tel.: +49 (0)5743 6181-0
www.home-deluxe-gmbh.de

GA-016-01_SUENO
2022/09